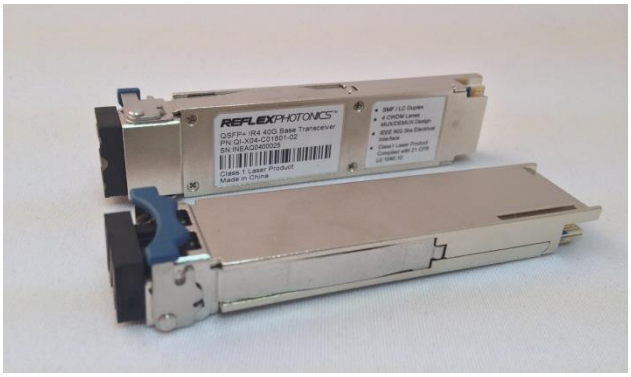

QI-X04-C01801-02 QSFP+ IR4 SMF

Product Summary

The Quad Small Form-Factor Pluggable (QSFP+) IR4 transceiver is a highly integrated 4-channel optical module that provides increased port density and total system cost savings. The QSFP+ full-duplex optical modules offer 4 CWDM transmit and receive channels, each capable of 10.3125 Gbps operation for an aggregate bandwidth of 41.25 Gbps over 2 km of single mode optical fiber.

The QSFP+ IR4 transceiver modules have been designed to meet the harshest external operating conditions including temperature, humidity and EMI interference. The modules offer very high functionality and feature integration, accessible via a two-wire serial interface.

The central wavelengths of the 4 CWDM channels are 1271, 1291, 1311 and 1331 nm as members of the CWDM wavelength grid defined in ITU-T G694.2. It contains a duplex LC connector for the optical interface and a 38-pin connector for the electrical interface. To minimize the optical dispersion in the long-haul system, single-mode fiber (SMF) has to be applied in this module.

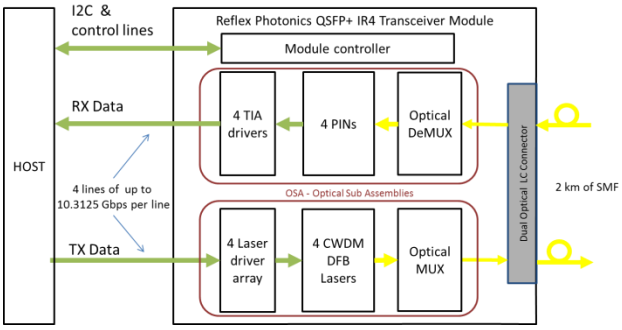

QSFP+ IR4 Transceiver Block Diagram

Specifications and Features Highlights

- **Up to 10.3125 Gbps per channel bandwidth**
- **4 CWDM channels MUX/DEMUX design**
- **Single +3.3V power supply**
- **CML compatible electrical I/O**
- **Up to 2 km transmission distance**
- **Single-Mode Optical Fiber (SMF)**
- **Duplex LC connector**
- **Operating case temperature: 0 to 70°C**
- **Digital diagnostic capabilities**
- **Maximum power consumption 3.5 W**
- **QSFP+ MSA compliant**
- **RoHS compliant**

Applications

- **Data Centers**
- **Ethernet 40G BASE-IR4**
- **Infiniband QDR**
- **40G Campus link**

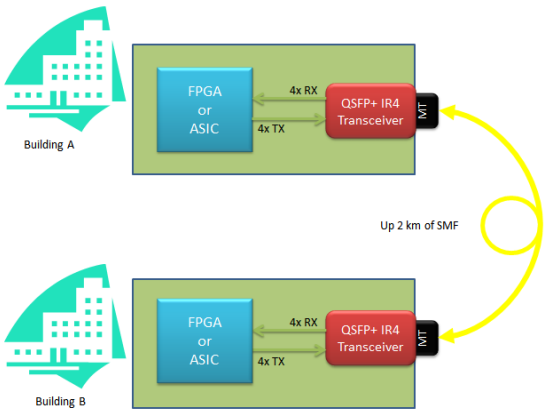

QSFP+ IR4Transceiver Application example

Copyright 2014 Reflex Photonics Inc.

Optical Interface Lanes

The figure below shows the orientation of the dual LC single mode fiber facets of the optical connector.

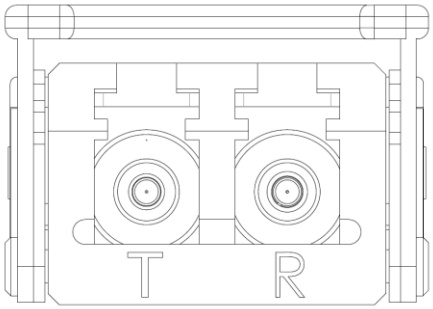

Mechanical Considerations

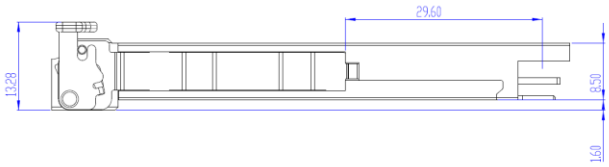

Compliance

Description	Specification
Safety	*Laser Class 1 product* *EN 60825-1: 2007*
EMC	*EN 55022: 2010* *EN:55024:2010*
RoHS	*2002/95/EC*
General information only; details are in data spec	

Ordering information

Part Number	Description
QI-X04-C01801-02	40G Ethernet, QSFP+ IR4, 2km SMF Fiber Optic Transceiver Module (10.3 Gbps per channel/RX and TX).

For more information on this or other products:
Contact sales at
1-514-842-5179 or **1-408-715-1781**
or by email at sales@reflexphotonics.com

© Copyright 2014; Reflex Photonics, Inc.

This document including pictures and drawings contains information about a new product during its early phase of development. The information contained herein is given to describe certain components and shall not be considered as a guarantee of characteristics. Reflex Photonics reserves the right to change the design or specifications of the product at any time without notice. The material is provided as is and without any warranties, including but not limited to warranties of non-infringement, description and fitness for a particular purpose.

Disclaimer: Information furnished by Reflex Photonics is believed to be accurate and reliable. However, no responsibility is assumed for its use. Reflex Photonics makes no representation that the interconnection of its circuits as described herein will not infringe on existing patent rights.

Note: Document revision history is present in separate document.